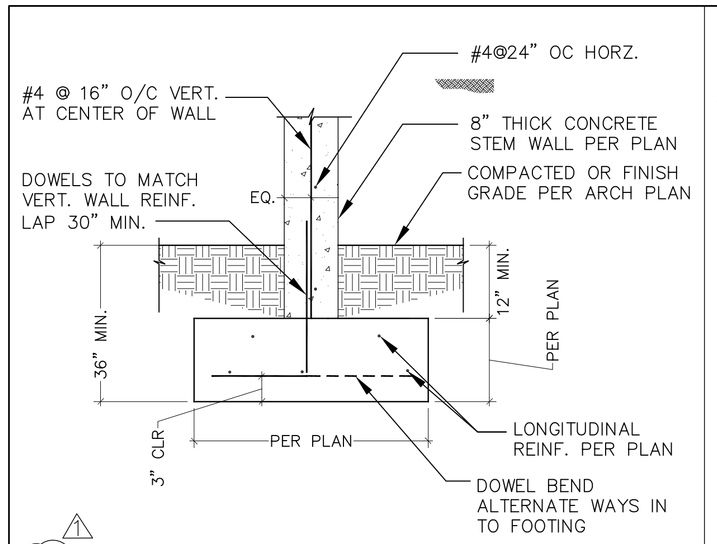

1 INTERIOR CONC. WALL FOUNDATION

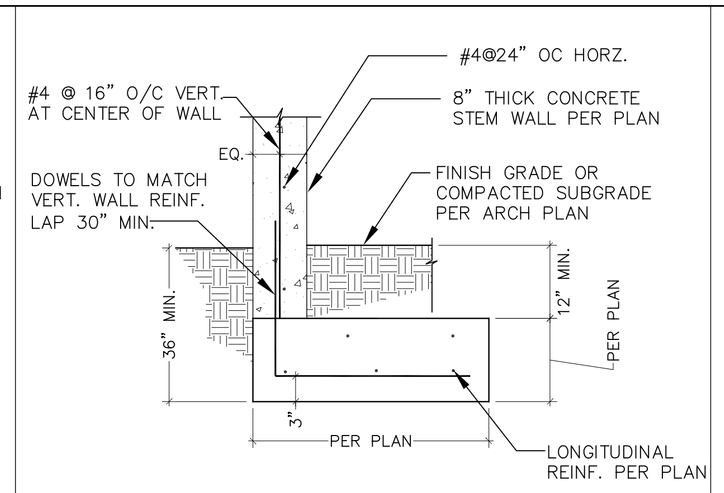

2 EXTERIOR CONC. WALL FOUNDATION

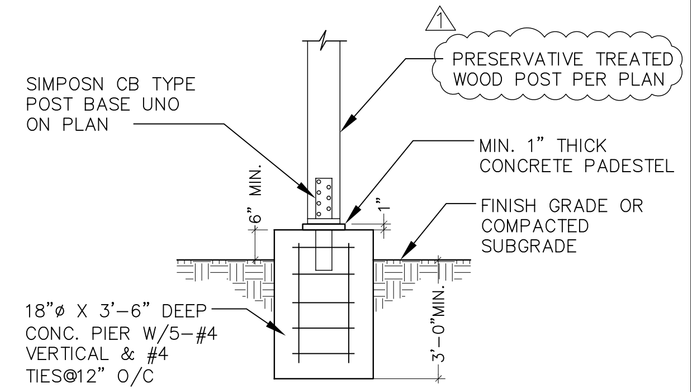

3 WOOD POST AT INTERIOR FOUNDATION

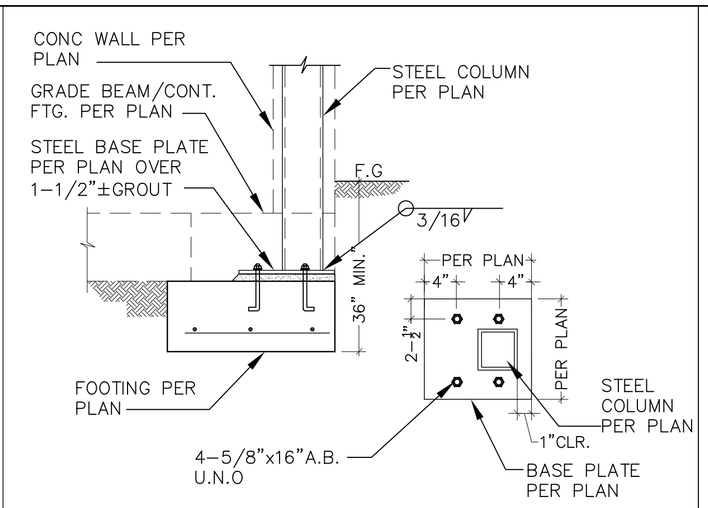

4 STEEL COL AT EXTERIOR WALL

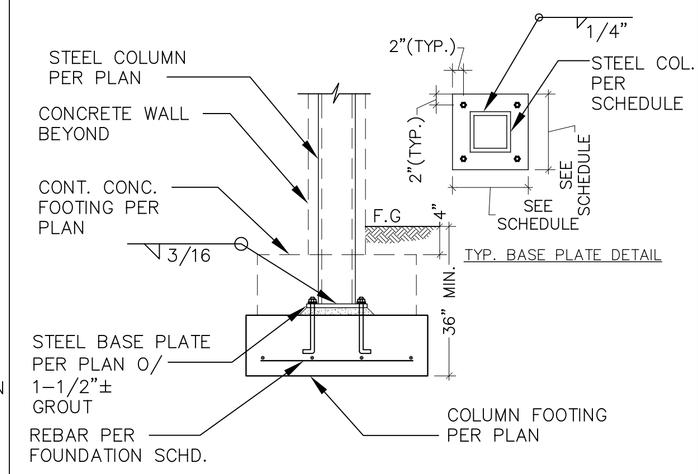

5 STEEL COL AT CONT. WALL FOOTING

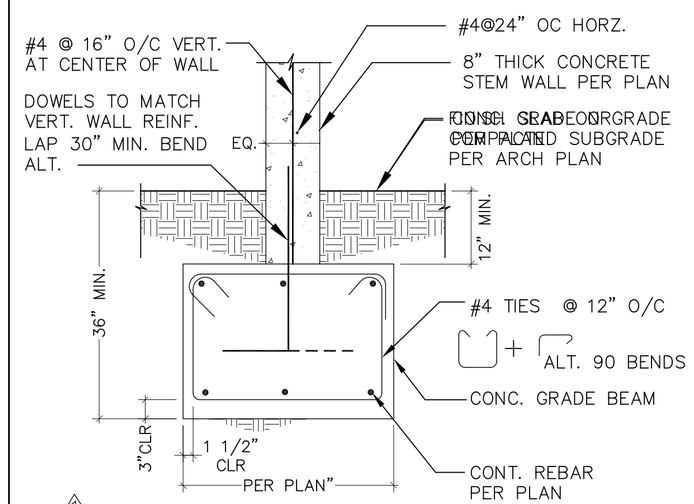

6 CONC. WALL AT GRADE BEAM

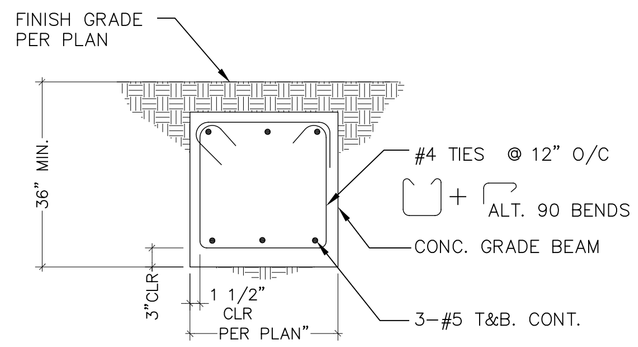

7 GRADE BEAM DETAIL

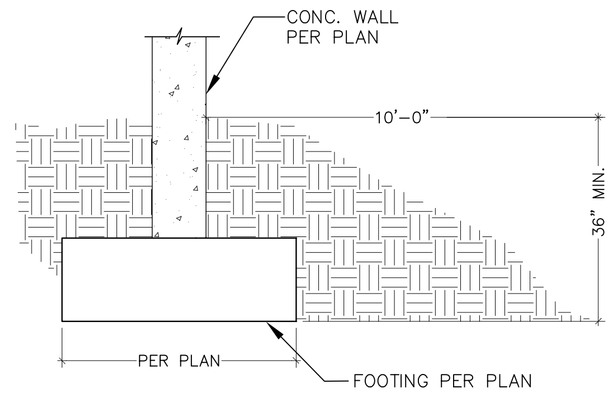

8 SPREAD FTG. FOUNDATION REQUIREMENT

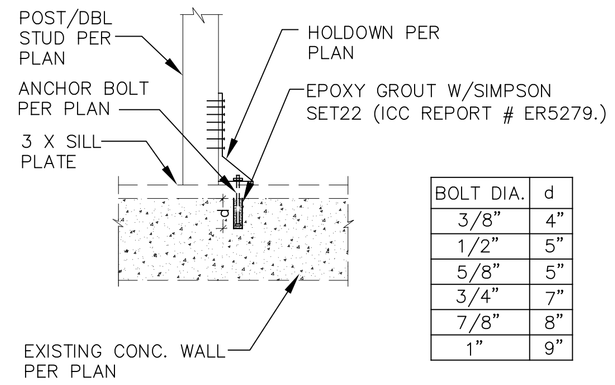

BOLT DIA.	d
3/8"	4"
1/2"	5"
5/8"	5"
3/4"	7"
7/8"	8"
1"	9"

9 HOLDOWN AT EXISTING CONC. WALL

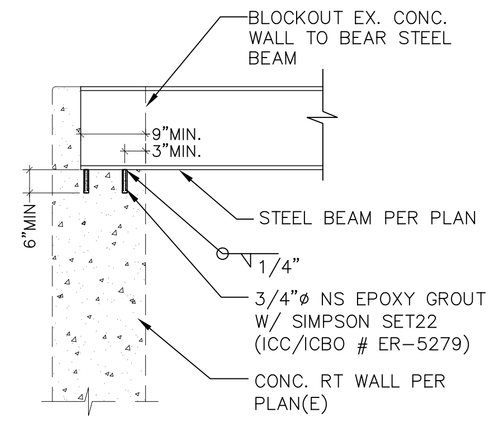

10 STEEL BEAM AT EXISTING CONC. WALL

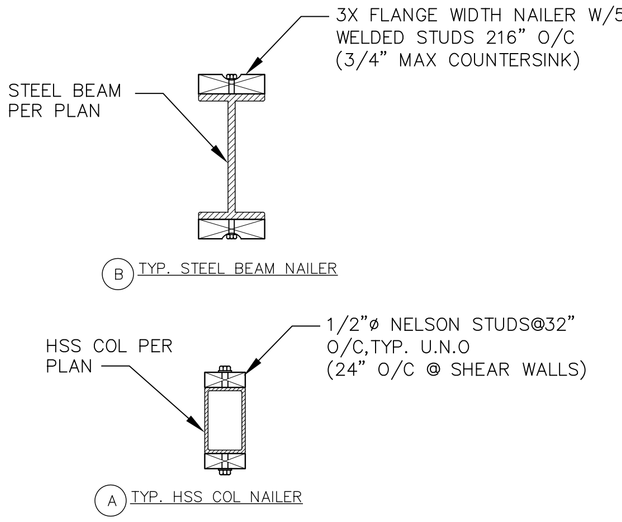

11 TYP. NAILER AT BEAM AND COLUMN

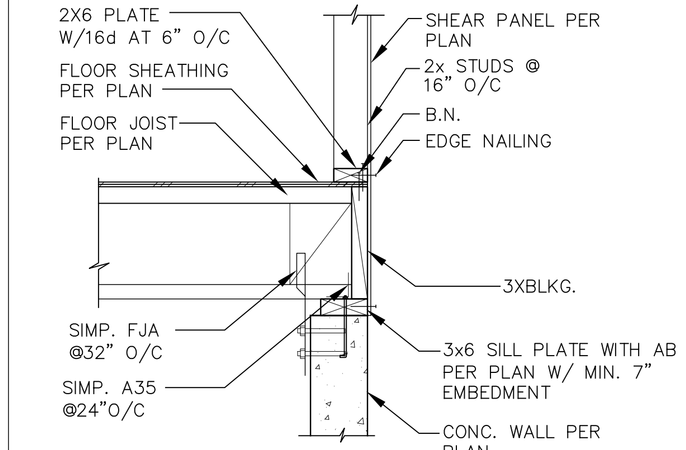

NOTE : AT EXISTING CONC WALL EPOXY A.B. PER TABLE OF DETAIL 9/--

12 FLOOR JOIST AT EXT. CONC. WALL

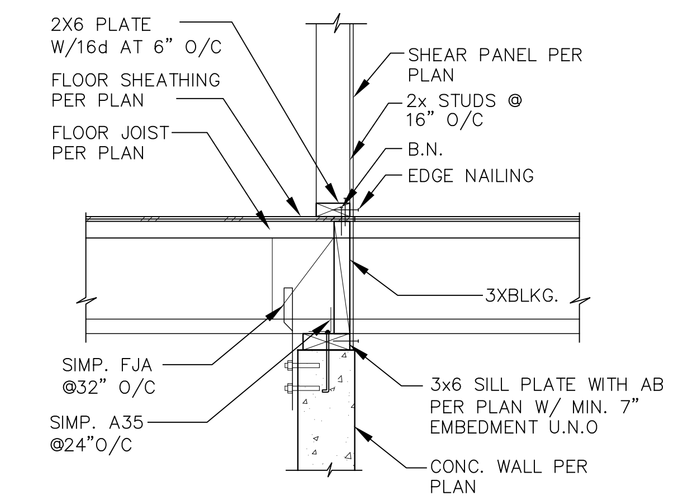

13 FLOOR JOIST AT INT. CONC. WALL

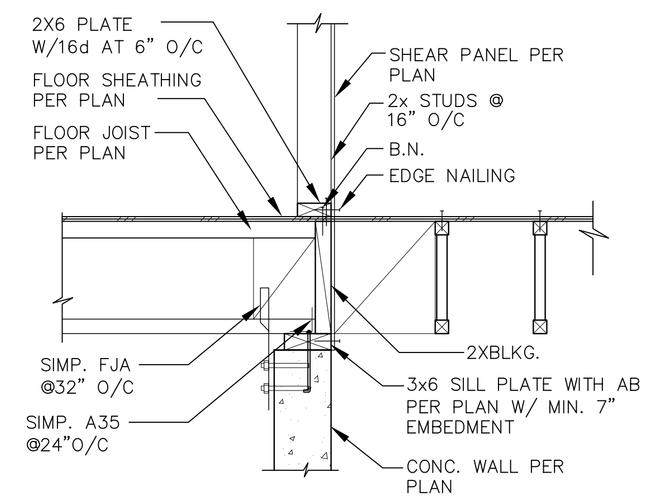

14 FLOOR JOIST AT EXT. CONC. WALL

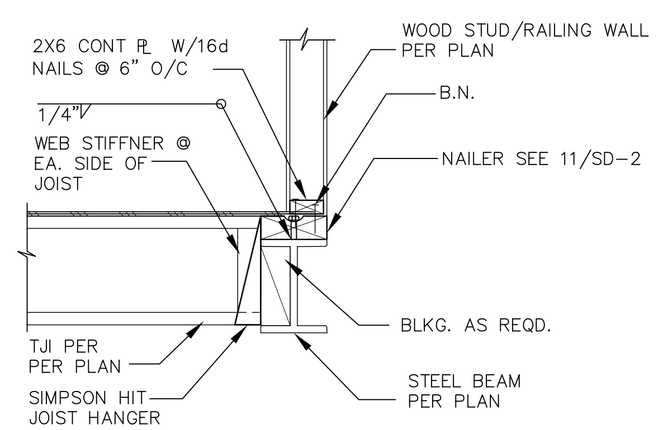

15 TJI PRP. AT STEEL BEAM

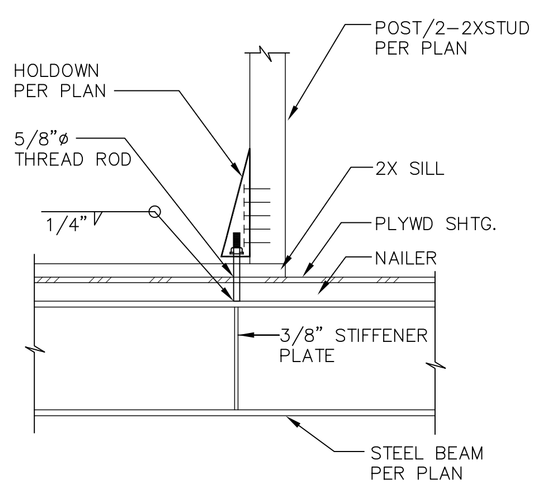

16 HOLDOWN AT STEEL BEAM

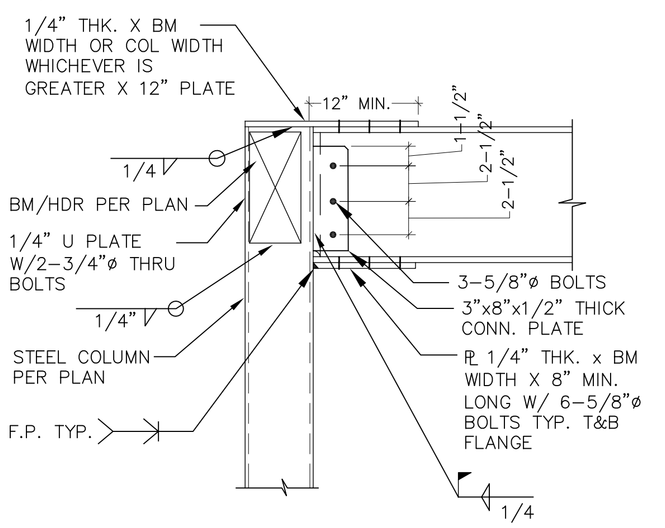

17 BEAM/HDR CONN TO STEEL COL

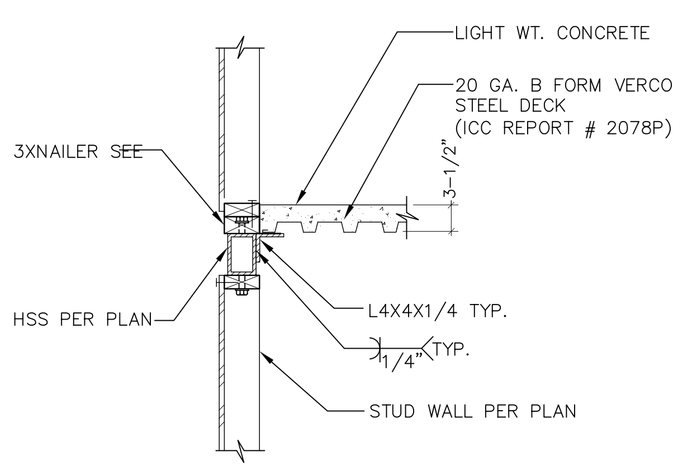

18 STAIR DECK FLOOR

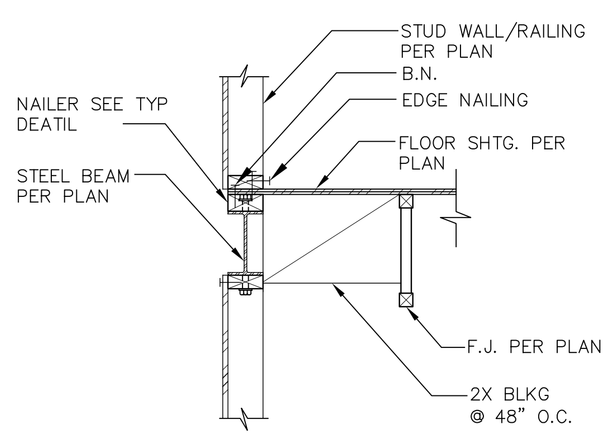

19 FRAMING DETAIL

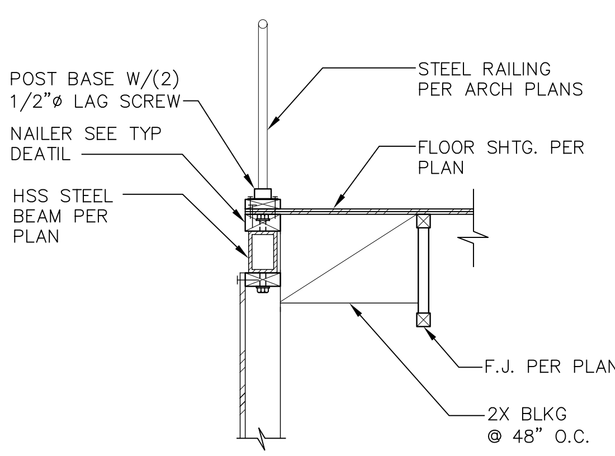

20 FRAMING AT HSS BEAM

NO.	DATE	REVISIONS
1	6-26-08	PER CITY COMMENTS
2		
3		

DESIGN EVEREST
STRUCTURAL ENGINEERS
3351 ALMA STREET, SUITE 211
PALO ALTO, CA 94306

PROJECT
NIJJAR RESIDENCE
1912 20TH ST,SAN FRANCISCO,CA

TITLE
STRUCTURAL DETAILS

SEAL

DRAWN : BS
ENGG. : AP
DATE : 8/04/2008
JOB : 07-24

SD-2

SHEET 6 OF 8