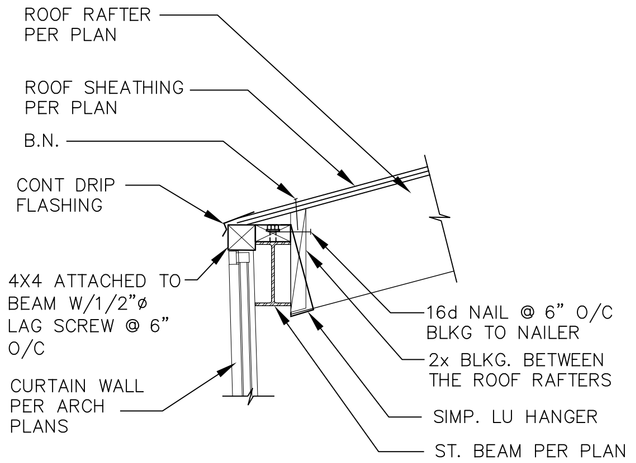

1 ROOF FRAMING AT CURTAIN WALL

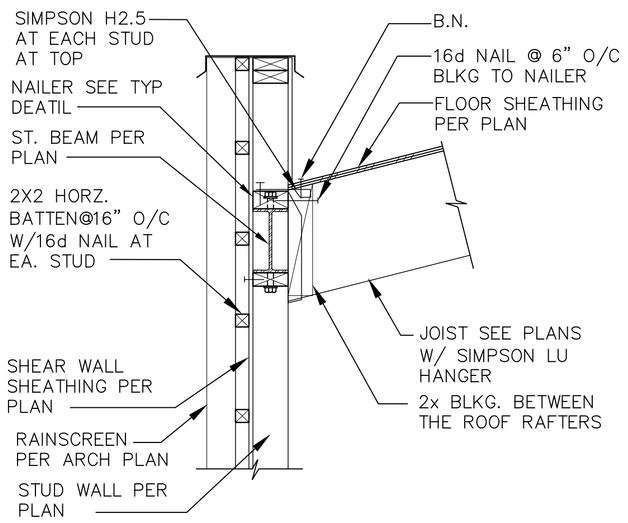

2 ROOF FRAMING AT RAINSCREEN

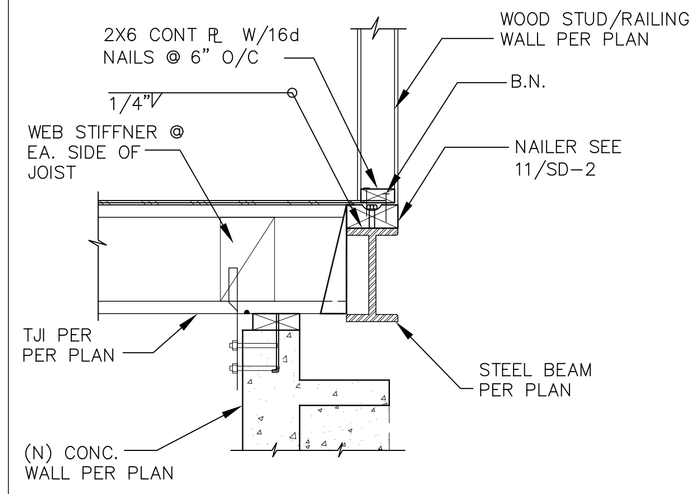

3 OVERHANG FRAMING AT CONC. WALL

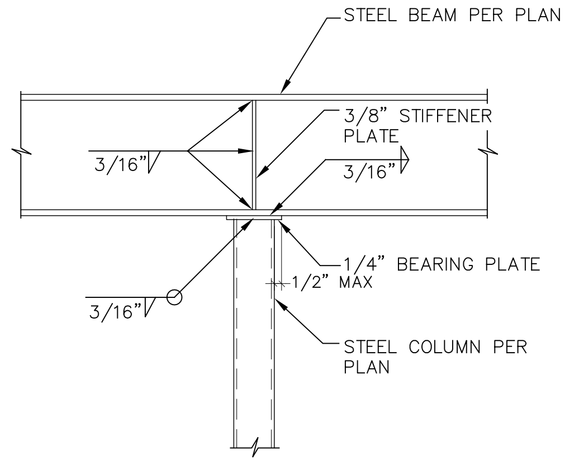

4 STEEL BEAM CONT. OVER STEEL COL

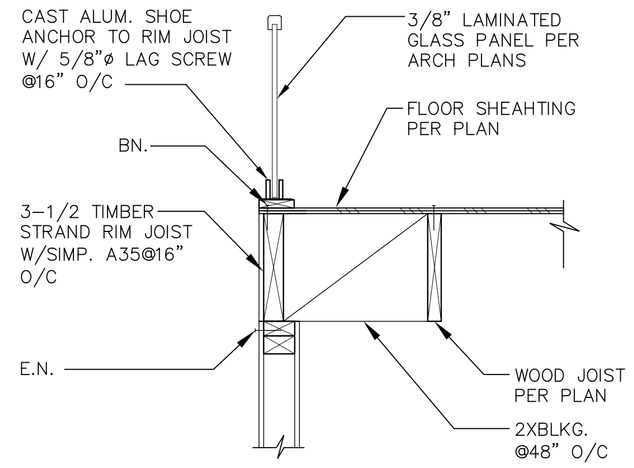

5 GLASS HANRAIL @UPPER WOOD DECK

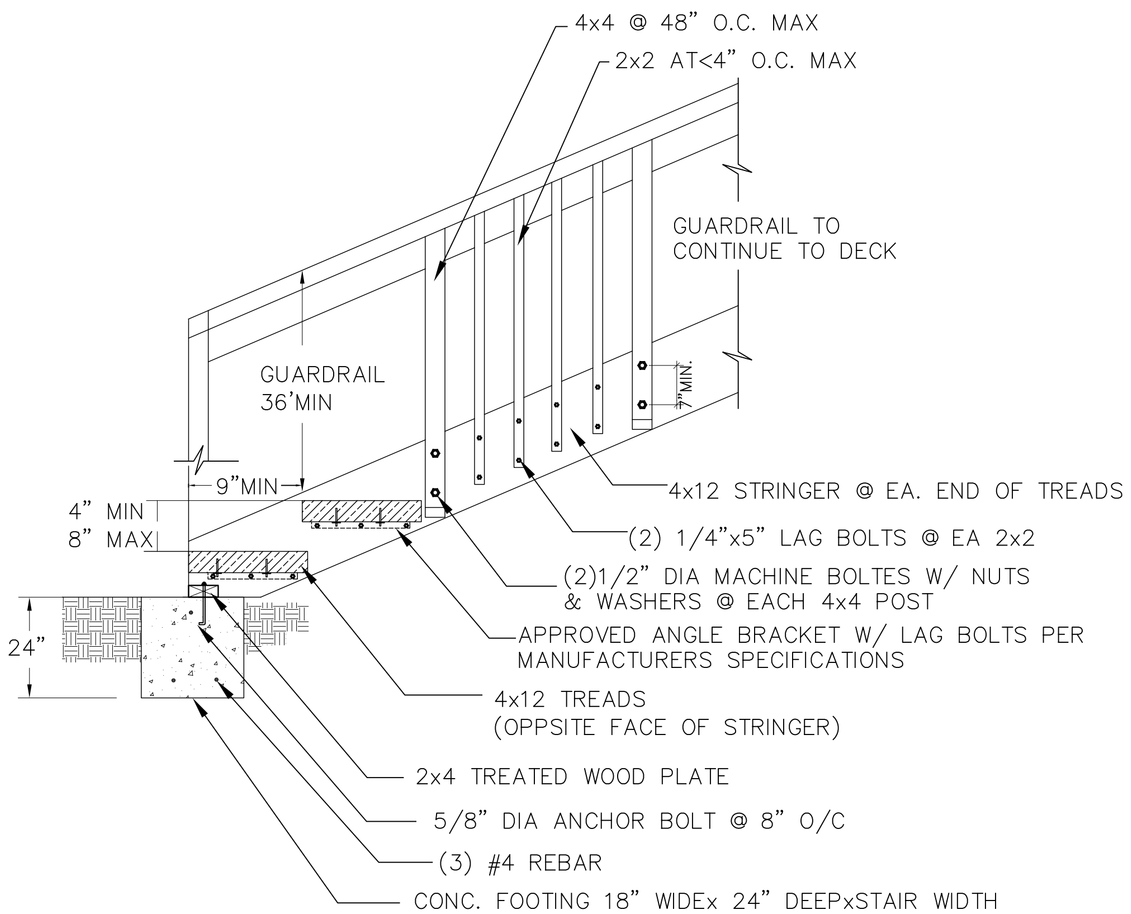

6 TYP. EXTERIOR STAIRWAY DETAIL

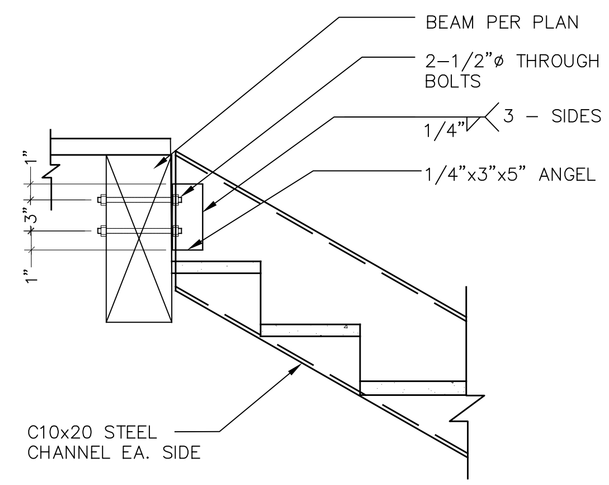

7 ALT. STEEL STAIR ANCHORAGE DETAIL

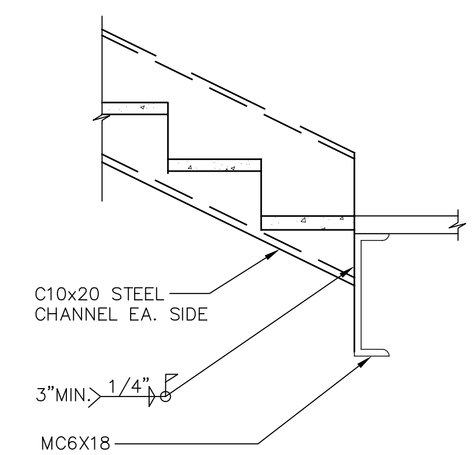

8 ALT. STEEL STAIR ANCHORAGE DETAIL

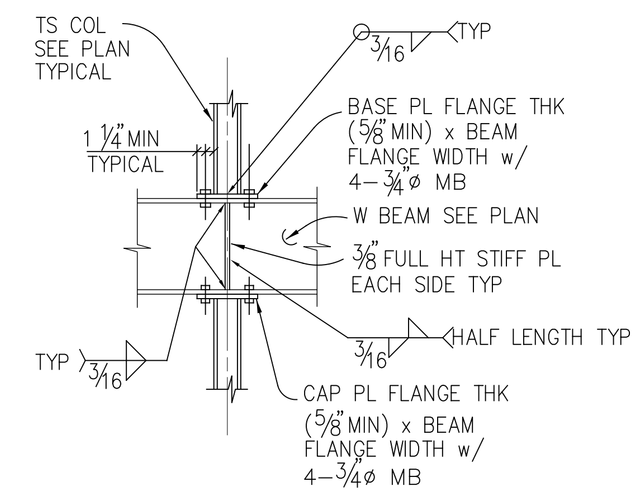

9 TYP TS COLUMN ABOVE AND ST. BEAM

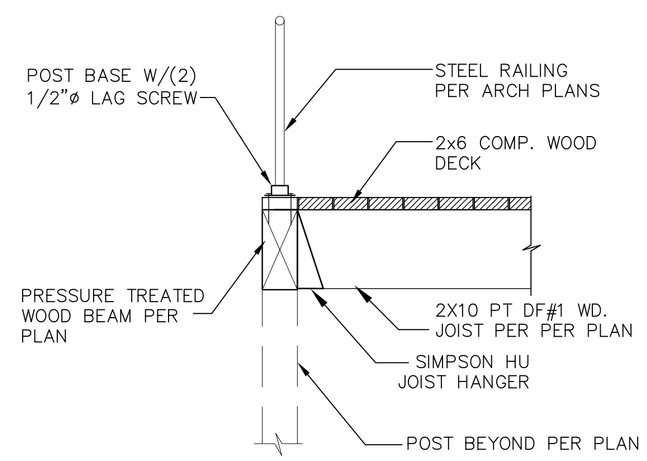

10 OPEN FLOOR DECK

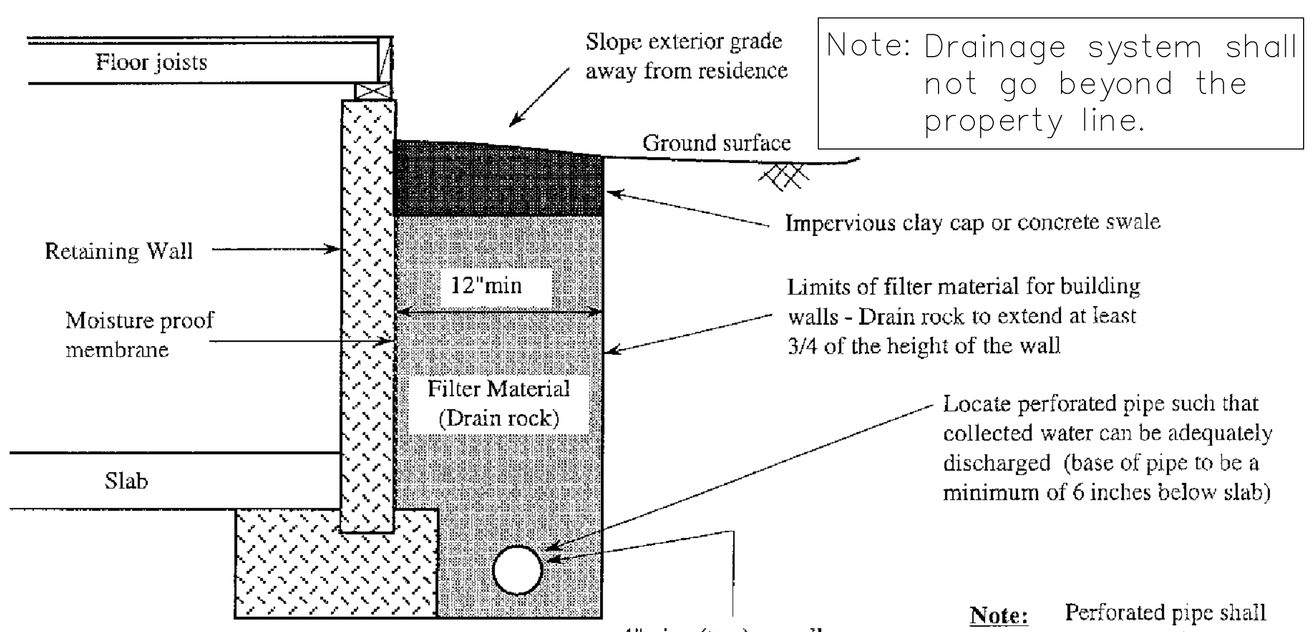

TYPICAL SECTION
(Not to Scale)

Note: Perforated pipe shall be placed with perforations face down

Subdrain pipe shall be manufactured in accordance with the following requirements:

a. Acrylonitrile-butadiene-styrene (ABS) plastic pipe shall conform to the specifications for ABS plastic pipe given in ASTM Designation D2282 and ASTM Designation D2751. ABS pipe shall have a minimum pipe stiffness of 45 psi at 5% deflection when measured in accordance with ASTM Method D2412.

b. Polyvinyl chloride (PVC) pipe shall conform to AASHTO Designation M278. PVC pipe shall have a minimum pipe stiffness of 50 psi at 5% deflection when measured in accordance with ASTM Method D2412 except that pipe conforming to F758 shall be suitable. Schedule 40 PVC pipe shall be suitable. SDR-35 PVC pipe conforming to ASTM D3034 shall be suitable when the thickness of pipe cover does not exceed 12 feet.

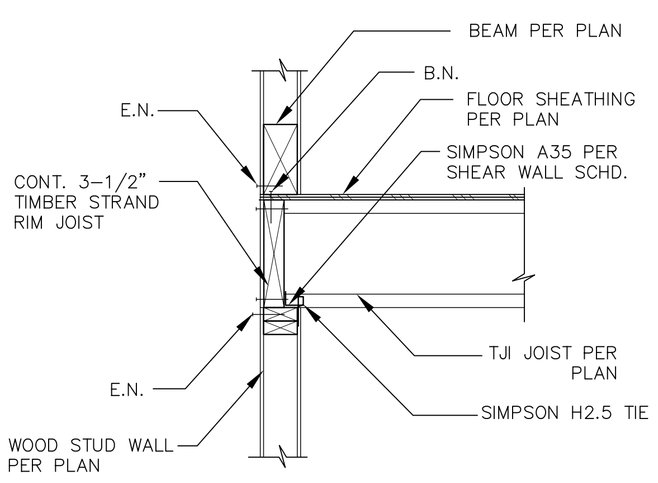

11 EMBEDDED BEAM AT STUD WALL

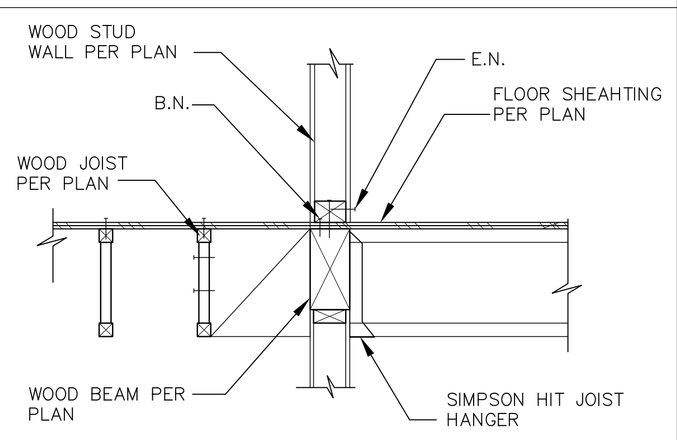

12 FLOOR FRAMING DETAIL

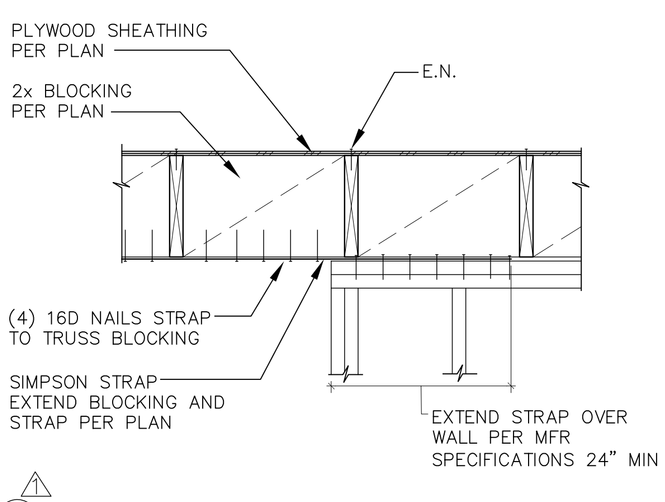

13 STRAP AT END OF STUD WALL

14 SUBDRAINS BEHIND RETAINING WALLS

NO.	DATE	REVISIONS
1	6-26-08	PER CITY COMMENTS
2		
3		

DESIGN EVEREST
STRUCTURAL ENGINEERS
3351 ALMA STREET, SUITE 211
PALO ALTO, CA 94306

PROJECT
NIJJAR RESIDENCE
1912 20TH ST,SAN FRANCISCO,CA

TITLE
STRUCTURAL DETAILS

SEAL

DRAWN : BS
ENGG. : AP
DATE : 7/28/2008
JOB : 07-24

SD-4

SHEET 8 OF 8